HCD PP SFR DEPENDENCIES

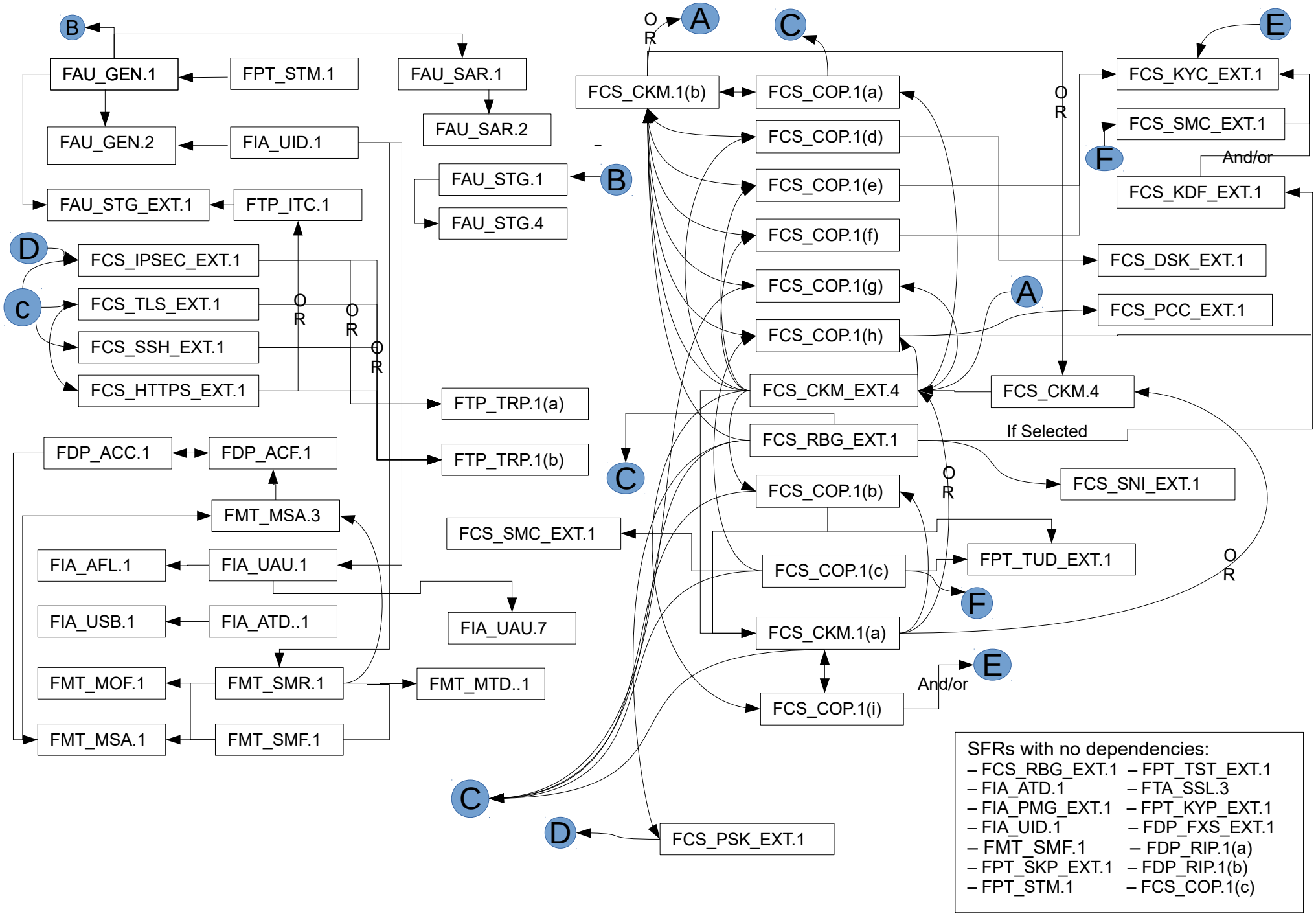

SFRs with no dependencies:

- FCS_RBG_EXT.1
- FIA_ATD.1
- FIA_PMG_EXT.1
- FIA_UID.1
- FMT_SMF.1
- FPT_SKP_EXT.1
- FPT_STM.1
- FPT_TST_EXT.1
- FTA_SSL.3
- FPT_KYP_EXT.1
- FDP_FXS_EXT.1
- FDP_RIP.1(a)
- FDP_RIP.1(b)
- FCS_COP.1(c)